【Lights line connection diagram】

※Referring to Figure 2

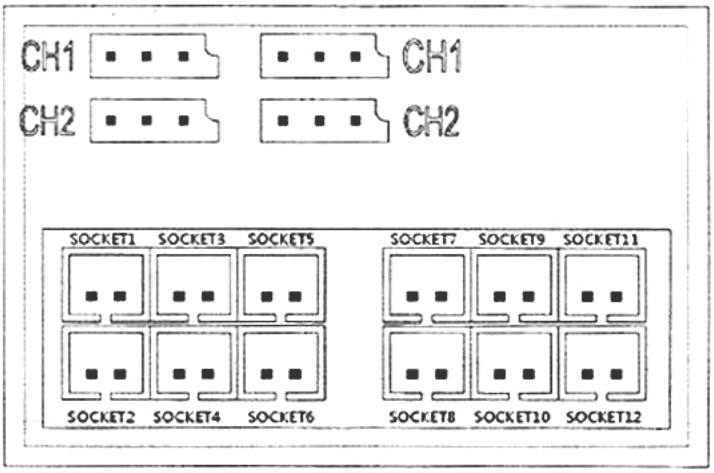

Figure 1

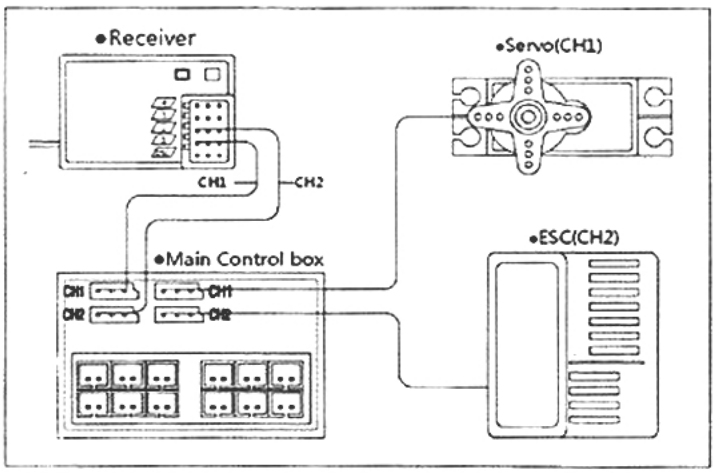

Figure 2

【LED light installation diagram car shell (the same the headlights color and the color of the cable) 】

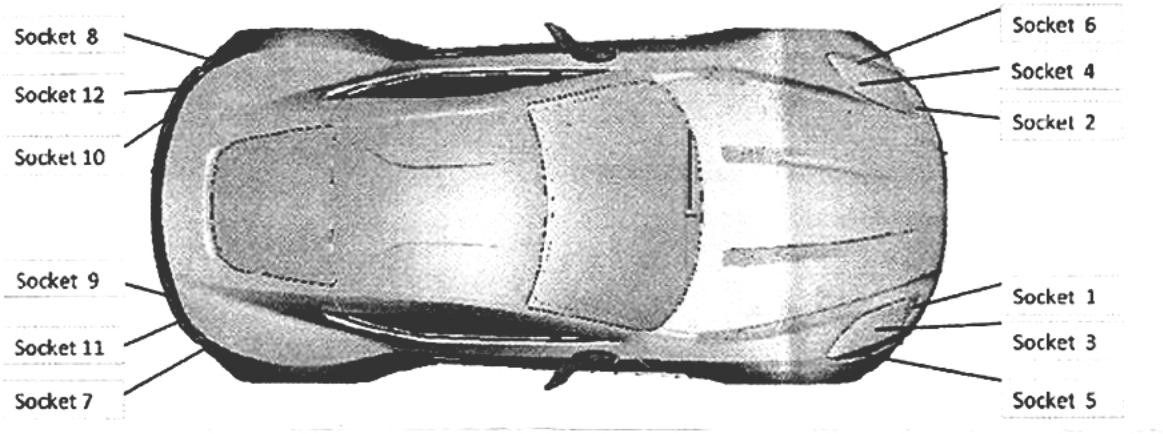

【Products mode and the LED status】

☼ 100% Brightness ☐50% Brightness ⦿Flashing ●Not bright

		Socket3,4	Socket1,2	Socket5,6	Socket7,8	Socket9,10	Socket11,12
Conventional operating mode	Stop	☼	☐	●	●	☐	●
	Forward	☼	⦿	●	●	●	●
	Forward left	☼	☼	⦿	●	●	●
	Forward right	☼	☼	●	☐	●	●
	Brake	☼	☼	●	●	☼	●
	Backward	☼	☼	●	●	☼	☼
	Backward left	☼	☼	⦿	●	☼	☼
	Backward right	☼	☼	●	⦿	☼	☼
Night mode	Full operation	☼	☼	☼	☼	☼	☼
Fog mode	Full operation			☼	☼	☐	
Emergency mode	Full operation			⦿	⦿	☐	
Burst flash mode	Full operation	4 explosive flash lights mode					

【Warranty Information】

- The warranty period is 12 months, limited to quality problems of material and process defects to be repaired or replaced for free;
- Those damages arise from wrong installation, wrong handling, misuse and collision will not be repaired for free, as well as those parts repaired or changed by those unauthorized agents;
- Those damages arise from wrong installation, wrong handling, misuse and collision will not be paid for repair.

User Manual

Thank you for your to buy RC HOBBY lights with intelligent control system , powerful , easy to handle , easy to install , is the first choice of the majority of car models lovers . There are many unique features of this product , use it more heart for you , before using this product , complete and carefully read the instructions avoid improper operation dysfunction or damage to the product .

【Product Features】

- The Smart operating system , with the vast majority of RC Cars remote control system .
- The LED status directly from the RC transmitter linkage control without adding any ancillary equipment , convenient and reliable .
- The LED System lighting effects with conventional operating mode , night mode , fog mode , emergency mode.
- The system contains 4 combo the burst flash mode (such as strobe light , breathing light , cruise lights) .
- The system channel CH2 (TH) positive and negative phase intelligent set free to switch lights each mode transmitter linkage .

【Product list】

- LED system control box x 1PC
- Servo extension cable x 2PCS
- One manual
- LED system group (12PCS), With the following accessories:

  5mm White LED group x 4PCS

  5mm Red LED group x 2PCS

  3mm Yellow LED group x 4PCS

  5mm Blue LED group x 2PCS

【Product parameters】

- Operating voltage: 4.8V- 6.0V
- Operating current: 100mA
- Dimensions: 49 x 32 x 16mm
- LED cable length: 30cm
- Servo extension cable length: 32cm
- Weight: 50g

【Product installation】

1) To choose loading the car LED shell and lights in the appropriate location on the car shell drill holes

2) LED control box with double-sided adhesive paste to the appropriate location in the car ;

3) LED Lights plug into the lights control box corresponding socket ;

4) LED lights in the lights on the car shell holes and fixed ;

5) CH1 and CH2 plug into the servo extension cord , the other end connected to the receiver corresponding socket ;

6) the the rudder machine with the throttle servo / ESC is connected to the CH1 and CH2 outlet ;

7) Collated all connections to avoid some of the interference of the receiver antenna and any action of the vehicle ;

※Because the system is not set the direction ST in the NOR / REV, so different transmitter (and Settings) in the above installation "left turn lights " and a "right turn lights " may need to change.

【Function control】

When the power of LED system control box is switched on, all LED will be on for 1 second,

The return set throttle TH positive and negative phase : to promote the throttle CH2 to forward LED will flash 2 times , that this action is set to lights forward , and vice versa for the back ;

The system defaults to normal operating mode , when you choose to enter other lighting modes , to be controlled by operating the transmitter throttle the CH2 and direction round CH1 , follow these steps:

1) To promote the CH2（throttle）to brake status (brake lights will be on) and to maintain this action ;

2) Stable rotation direction of the wheel CH1 after 3 times right (right right right) , enter all the lights mode ;

3) In this operating the analogy, seven kinds of lights mode selection .

4) When the need to exit in any one mode , the stable rotation of the direction wheel CH1 after 3 times left (left left left) , then return to the normal operating mode .

※ LED system control box every time the power of work , you must set the throttle TH positive and negative phase , otherwise it may appear abnormal .

※Because the system is not set the direction ST in the NOR / REV , the different transmitters (and setting) in the above operation when " left left left" and " right right right" may need to be exchanged.

【Schematic diagram of control box】

Socket1 , 2 : Lower Light(5mm blue)

Socket3 , 4 : Head Light(5mm white)

Socket5 , 6 : Left-turn signal(3mm yellow)

Socket7 , 8 : Right-turn signal(3mm yellow)

Socket9 , 10 : Reversing Light(5mm white)

Socket11 , 12 : Brake Light(5mm red)