MOONLIGHT KIT

QUICKSTART GUIDE

V1.2

Introduction

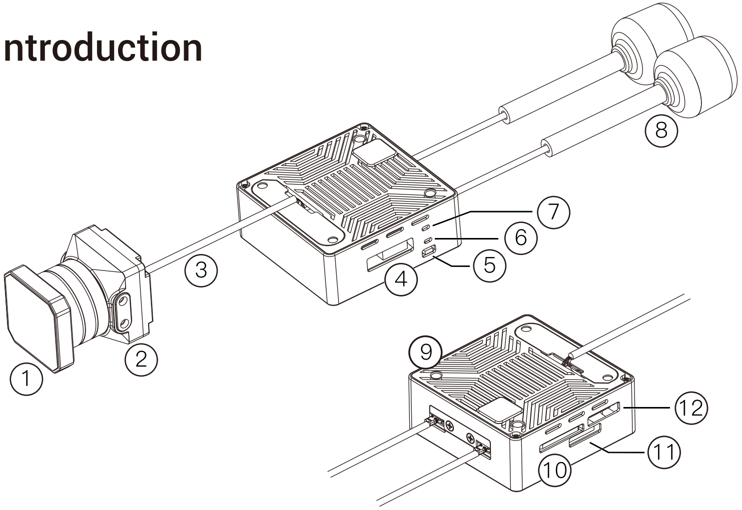

1、ND Filter
2、Camera
3、Coaxial Cable
4、Power Port
5、Link Button
6、VTX LED
7、REC LED
8、Antenna
9、M2 Mounting Hole
10、Micro SD Card Slot
11、VTX USB Port
12、REC USB Port

Connection

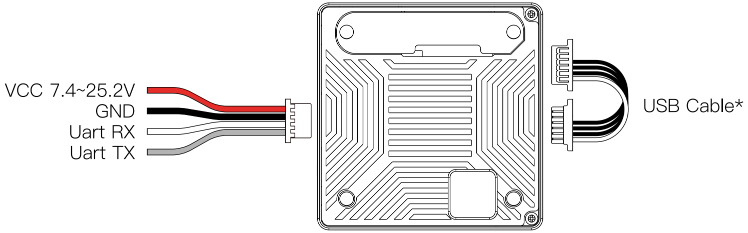

* White line aligns with white circle connection.
This cable only needs to be connected when upgrading.

Precautions

⚠

- Power consumption: 12V@1.4A; 8V@2.2A
  Please consider the power supply capability of the power supply.
- When use 6s batteries, it is recommended to solder capacitors at the power input.
- It generates a lot of heat during recording, so please pay attention to airflow for heat dissipation.

Linking

1. Connect the moonlight kit and the power of the goggles.
2. Short press the moonlight kit and goggles linking buttons respectively, when the moonlight kit enters the pairing state The VTX LED turns red, and the goggles end is a DI... DI... DI...
3. After the link is successful, the indicator light on the VTX LED turns solid green, the beeping sound on the goggles stops and the screen is displayed.

Upgrade

Please go to the official website to download the upgrade firmware, AvatarMoonlight_Sky_X.X.X.img is the Moonlight camera file, Copy to Micro SD card, be careful not to change the file name.Before upgrading, you need to connect the REC port and VTX port using the USB cable included in the package.

1、The USB cable connecting REC port and VTX port (as shown in the Connection diagram)

2、Copy the upgrade file to the root directory of the microSD card (delete if there are old firmware files), connect the power and wait for the VTX green light to flash.

3、Press and hold the linking button for 8 seconds. When the indicator light turns red and flashes, release the button (it is normal for the indicator light to go out during the upgrade process) . Please do not cut off the power during the upgrade process!

4、The upgrade time is about 50 seconds. After the upgrade is successful, the VTX indicator light will flash green or stay on. The REC indicator light turns solid green.

Solutions to abnormal situations：

- If the REC indicator light turns solid blue during the upgrade process, it means the USB cable connection is abnormal. Please check whether the USB cable is connected properly or replug it.
- If the VTX indicator light changes to green flashing or solid light after long pressing the linking button without red light flashing, please check whether the firmware is correct or whether the SD card is detected.

UART

The UART function enables the VTX communicate with the flight controller, allowing the VTX obtain the flight controller information. Take Betaflight Configurator as an example to introduce the UART setting method.

1. Solder the white and gray wires of the 4 pin cable to the flight controller (refer to the Connection page).

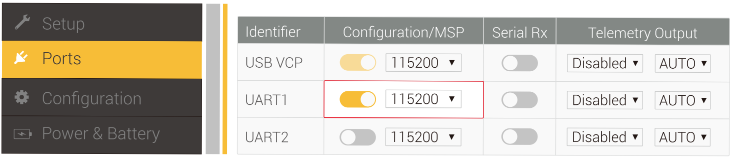

Identifier	Configuration/MSP		Serial Rx	Telemetry Output	
USB VCP	☑	115200	☐	Disabled	AUTO
UART1	☑	115200	☐	Disabled	AUTO
UART2	☐	115200	☐	Disabled	AUTO

2. Connect the flight controller to the Betaflight Configurator, and open the corresponding UART port (Take UART1 as an example in the figure) Check the MSP switch and click Save.

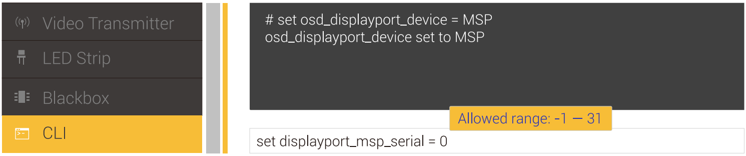

```
# set osd_displayport_device = MSP
osd_displayport_device set to MSP
```

```
set displayport_msp_serial = 0
```

3. Open the CLI command line and enter the content in red font
“set osd_displayport_device = MSP”
“set displayport_msp_serial = Y” (Where Y is one less than the number of the serial port. e.g. Y = 2 for serial 3)
“save”

Betaflight 4.4 version settings：

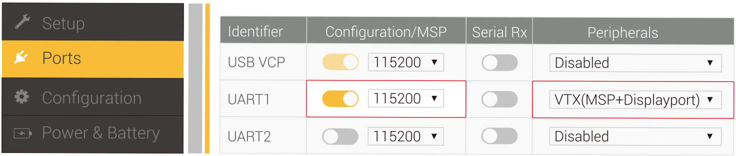

Identifier	Configuration/MSP	Serial Rx	Peripherals
USB VCP	● 115200 ▼	○	Disabled ▼
UART1	● 115200 ▼	○	VTX(MSP+Displayport) ▼
UART2	○ 115200 ▼	○	Disabled ▼

1.Open the corresponding uart port (Take uart1 as an example in the figure) Check the MSP switch and click Save, Check the VTX (MSP+Displayport)。

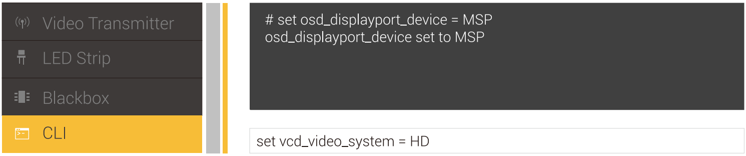

```
# set osd_displayport_device = MSP
osd_displayport_device set to MSP
```

```
set vcd_video_system = HD
```

3. Open the CLI command line and enter the content in red font,
“set osd_displayport_device = MSP”
“set vcd_video_system = HD”
“save”

Status indication

REC Indicator Status	
USB cable not connected	Steady blue light
Upgrade firmware	Red light rapidly flashes and Steady red light
Working fine	Steady green light
Recording status	Green light slowly flashes
Camera not detected	Blue light slowly flashes
VTX Indicator Status	
Binding status	Steady red light
Upgrade firmware	Red light rapidly flashes and Steady red light
Works fine, wireless is not connected	Green light rapidly flashes
Works fine, wireless is connected	Steady green light
Device overheated	red and green lights flash alternately quickly
REC board signal not recognized	Green light slowly flashes

Operating channel

Central frequency(MHz)	Channel1	Channel2	Channel3	Channel4	Channel5	Channel6	Channel7	Channel8
FCC	5660	5695	5735	5770	5805	5878	5914	5839
CE/SRRC	5735	5770	5805	-	-	-	-	5839
MIC	5660	5700	-	-	-	-	-	5745

Make sure you fully understand and abide by local laws and regulations before using this product. An amateur radio license may be needed in FCC regions when using channels 1,2,6or 7, as they are amateur frequency bands. Users who use the amateur frequency bands with a modified or cracked version or without a license may be punished for breaking local laws or regulations.

Precautions

1、It generates a lot of heat during recording, so please pay attention to airflow for heat dissipation.
2、When using the built–in EIS or using gyro data, please provide shock absorption to the camera bracket to avoid anti–shake failure.
3、Automatically stops recording when the chip core temperature exceeds 95 degrees Celsius.
4、The menu setting high frame rate does not support 2.7K/4K recording, and the standard frame rate does not support 1080p100fps recording.
5、Built–in EIS is only supported when the VTX REC resolution is set to 2.7K
6、Cannot record while in standby mode.
7、Please use high–speed U3 or above Microsd card.
8、Commonly used with Avatar VTX coaxial cable, other lengths can be purchased for replacement.
9、Before powering on, please install all antennas to avoid damage to components.
10、When the standby mode is turned on, the power is limited to 10mW. Before taking off, you need to unlock the flight control or turn off the standby mode.
11、If you use it with other 5.8GHz devices at the same time, please choose a different channel.

VTX Specification

Model	Moonlight Kit
Firmware name	AvatarMoonlight_Sky_X.X.X
Communication Frequency	5.725–5.850 GHz
Transmitter Power (EIRP)	FCC: <30dBm; CE: <14dBm; SRRC: <20dBm; MIC: <25dBm
I/O Interface	JST1.0*4(power cable); JST0.8*6(USB) microSD Card Slot; IPEX–1
Sensor	Starlight sensor
FOV	Max 160°
Aperture	F2.1
Shutter	Rolling shutter
ISO	100–25600
Recording resolution	4K@30/60fps; 2.7K@30/60fps; 1080p@100/60fps; 720p@60fps

Max Mbps	150Mbps
Video format	MP4 (H.264)
3D DNR	Support
Gyro flow	Support
Built-in EIS	Support
Wide Power Input	7.4V-25.2V
Power consumption	12V@1.4A, 8V@2.2A
Memory card type	U3 microSD, Max 256G
camera size	19.6mm×19mm×24mm
VTX size	15.3mm×34.5mm×34.5mm
VTX Installation hole distance	20×20mm/25×25mm (M2)
Weight	38.5g (Antenna not included)
OSD	Canvas mode
Latency	Average delay 22ms
Antenna	2 (IPEX)

VTX Antenna

Model	Avatar V2 antenna
Polarization	LHCP
Frequency range	5600MHz-6000MHz
Average Gain	1.9dBi
VSWR	⩽1.5
Interface	IPEX-1
Dimension	R15 X 45mm (without cable)
Weight	2g

CADDXFPV Support
email: support@caddxfpv.com

This content is subject to change.Download the latest version from https://www.caddxfpv.com

MOONLIGHT KIT

快速入门指南

V1.2

简介

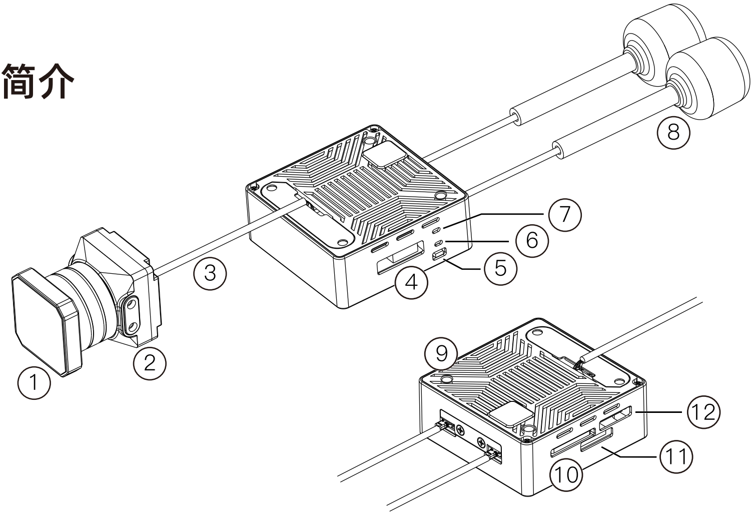

1、ND 滤镜
2、相机
3、同轴线
4、电源端口
5、对频按钮
6、VTX 指示灯
7、REC 指示灯
8、天线
9、M2 安装孔
10、Micro SD 卡槽
11、VTX USB 端口
12、REC USB 端口

接线

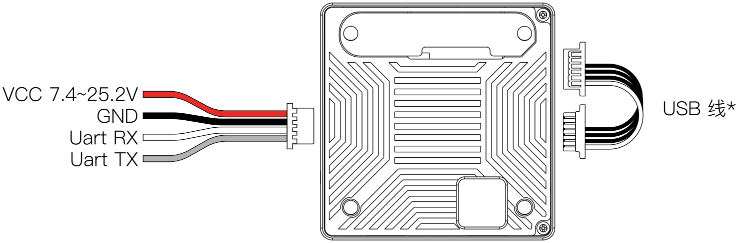

* 白线与白色圆圈连接对齐
此线缆仅需要在升级时连接，工作状态下连接不影响使用

注意事项

⚠
- 功耗参考: 12V@1.4A; 8V@2.2A，接线时请考虑电源供电能力
- 使用6S电池供电建议在电源输入端焊接电容
- 在录制状态下发热量大，请注意气流散热

对频

1. 连接 Moonlight Kit 和眼镜端电源。
2. 等待设备启机后，分别短按 Moonlight Kit 和眼镜端对频按钮，当进入配对状态时， VTX 指示灯变为红色，眼镜端发出滴... 滴... 滴...蜂鸣器提示。
3. 对频成功后，VTX 指示灯变为绿色常亮，眼镜端蜂鸣器停止并显示图传画面。

升级

请到官网下载最新升级固件，文件名 AvatarMoonlight_Sky_X.X.X.img 对应月光相机的升级固件，拷贝到 SD 卡中，注意请勿修改文件名，升级前需要将 REC 端口和 VTX 端口使用包装附带的 USB 线材连接。

1、将 REC 端口与 VTX 端口 USB 线材连接（如接线图所示），升级前需要将此

线接好。

2、将升级文件拷贝到 micro SD 卡的根目录下（如果有旧固件文件请删除），连接电源等待 VTX 绿灯闪烁。

3、长按对频按键 8 秒，指示灯变为红灯闪烁后松开按键（升级过程中指示灯熄灭为正常现象），升级过程中请勿断电！

4、升级时间大约为50秒，升级成功后，VTX 指示灯变为绿色闪烁或常亮，REC 指示灯变为绿灯常亮。

异常情况解决办法：

- 如果升级过程中 REC 指示灯变为蓝灯常亮，表示 USB 线连接异常请检查USB线是否连接好或者重新插拔。
- 如果长按对频按键后 VTX 指示灯直接变为绿色闪烁或常亮，没有出现红灯闪烁，请检查固件是否正确或是否检测到 SD 卡。

UART

UART功能可以使图传与飞控进行通信，获取飞控OSD等信息。以Betaflight Configurator为例介绍UART设置方法。

1.将4Pin电源线白线和灰线焊接到飞控Uart串口（参考连接页面），这里以Uart 1串口为例。

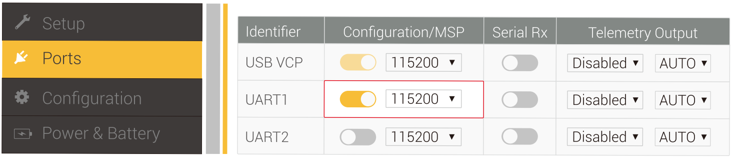

Identifier	Configuration/MSP		Serial Rx	Telemetry Output	
USB VCP	●	115200 ▾	○	Disabled ▾	AUTO ▾
UART1	●	115200 ▾	○	Disabled ▾	AUTO ▾
UART2	○	115200 ▾	○	Disabled ▾	AUTO ▾

2. 将飞控连接到Betaflight Configurator，打开对应的UART接口，勾选MSP开关，点击保存。

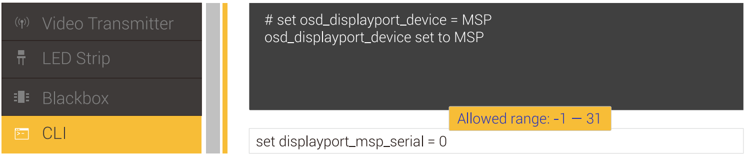

```
# set osd_displayport_device = MSP
osd_displayport_device set to MSP
```

```
set displayport_msp_serial = 0
```

3. 打开CLI命令行，输入红色字体内容，

“set osd_displayport_device = MSP”
“set displayport_msp_serial = Y”（其中 Y 比使用串口数小一位，
例如 Y = 0 对应Uart 1， Y = 2 对应Uart 3以此类推）
“save”

Betaflight 4.4 版本设置：

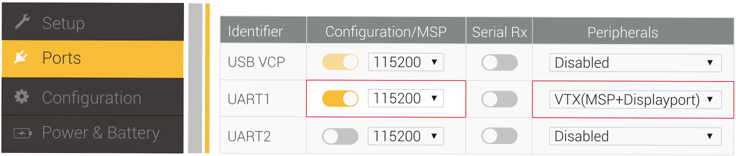

Identifier	Configuration/MSP	Serial Rx	Peripherals
USB VCP	● 115200	○	Disabled
UART1	● 115200	○	VTX(MSP+Displayport)
UART2	○ 115200	○	Disabled

1.打开对应的UART接口，勾选MSP开关，勾选VTX（MSP+Displayport）。

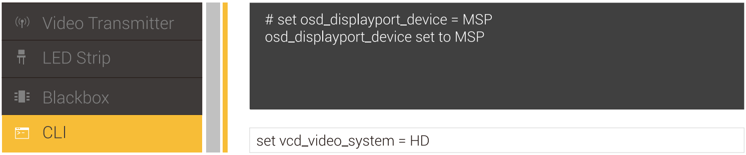

```
# set osd_displayport_device = MSP
osd_displayport_device set to MSP
```

```
set vcd_video_system = HD
```

3. 打开CLI命令行，输入红色字体内容，
“set osd_displayport_device = MSP”
“set vcd_video_system = HD”
“save”

状态指示

REC 指示灯状态	
USB 线连接异常	蓝灯常亮
升级固件	红灯闪烁和常亮
工作正常	绿灯常亮
录制状态	绿灯闪烁
未检测到摄像头	蓝灯慢闪
VTX 指示灯状态	

对频状态	红灯常亮
升级固件	红灯闪烁和常亮
工作正常，无线未连接	绿灯闪烁
工作正常，无线连接并出图	绿灯常亮
设备过热	红绿灯快速闪烁
未识别到 REC 板信号	绿灯慢闪

工作频道

Central frequency(MHz)	Channel1	Channel2	Channel3	Channel4	Channel5	Channel6	Channel7	Channel8
FCC	5660	5695	5735	5770	5805	5878	5914	5839
CE/SRRC	5735	5770	5805	-	-	-	-	5839
MIC	5660	5700	-	-	-	-	-	5745

使用本产品前，请确保您充分了解并遵守当地法律法规。 在 FCC 地区使用 1、2、6 或 7 频道时可能需要业余无线电许可证，因为它们是业余频段。 使用修改或破解版本或未经许可使用业余频段的用户可能会因违反当地法律或法规而受到处罚。

注意事项

1、在录制状态下发热量大，请注意气流散热。
2、使用内置防抖或者陀螺仪数据时，请给摄像头固定平台做减震避免防抖失效。
3、芯片内核温度超过 95 度时自动停止录像。
4、菜单设置高帧率不支持 2.7K/4K 录像，标准帧率不支持 1080p100fps 录像。
5、开启内置 EIS 防抖功能需将发射端录像分辨率设置为 2.7K。
6、处于待机模式时不可录像。
7、请使用高速 U3 以上规格 micro SD 卡。
8、与 Avatar 天空端同轴线通用，可以购买其他长度进行替换。
9、通电前请安装好所有天线，避免元器件损坏。
10、待机模式开启时功率受限 10mW，起飞前需解锁飞控或关闭待机模式。

11、如果您同时与其他5.8GHz设备一起使用，请选择不同频道。

参数规格

产品型号	Moonlight Kit
固件名字	AvatarMoonlight_Sky_X.X.X
通信频率	5.725–5.850 GHz
发射功率 (EIRP)	FCC: <30dBm; CE: <14dBm; SRRC: <20dBm; MIC: <25dBm
接口	JST1.0*4(电源线); JST0.8*6(USB) microSD卡槽; IPEX–1
传感器	星光级传感器
FOV	Max 160°
光圈	F2.1
电子快门	卷帘快门
ISO	100–25600
录制分辨率	4K@30/60fps；2.7K@30/60fps； 1080p@100/60fps; 720p@60fps
最大码率	150Mbps
视频格式	MP4 (H.264)
3D降噪	支持
陀螺仪数据	支持
内置电子防抖	支持
宽电源输入	7.4V–25.2V
功耗	12V@1.4A, 8V@2.2A
支持存储卡类型	U3 microSD卡, Max 256 G
相机尺寸	19.6mm×19mm×24mm
图传尺寸	15.3mm×34.5mm×34.5mm
图传安装孔距	20×20mm/25×25mm (M2)
重量	38.5g (不含天线)
OSD	Canvas mode
端到端延时	平均延时22ms
天线	2 (IPEX)

VTX 天线

型号	Avatar V2 antenna
极化方向	LHCP
工作带宽	5600MHz–6000MHz

平均增益	1.9dBi
输入阻抗	50Ω
驻波比	＜1.5
接口	IPEX-1
外形尺寸	R15 X 45mm （不含线）
重量	2g

CADDXFPV 技术支持
email: support@caddxfpv.com
此内容可能会修改，从以下位置下载最新版本
https://www.caddxfpv.com